THIS DRAWING IS UNPUBLISHED. RELEASED FOR PUBLICATION . . - -
© COPYRIGHT - By - ALL RIGHTS RESERVED.

REVISIONS					
P	LTR	DESCRIPTION	DATE	DWN	APVD
	AA	REV PER ECO 17-005913	5-2-17	CT	DM

WHEN ORDERING CONTACT ON TAPE, ORDER BY THE TAPE NUMBER PLUS THE PACKAGING CODE AS FOLLOWS:

2. FOR USE WITH AMP TAPETRONIC, PNEUMATIC TOOL–
   A. 1000 PARTS TO A BOX ADD PACKAGING CODE: 1MBOX
3. FOR USE WITH 4/8 INDENT STRIPPER CRIMP–
   A. 1000 PARTS TO A REEL ADD PACKAGING CODE: 1MREEL
   B. 5000 PARTS TO A REEL ADD PACKAGING CODE: 5MREEL

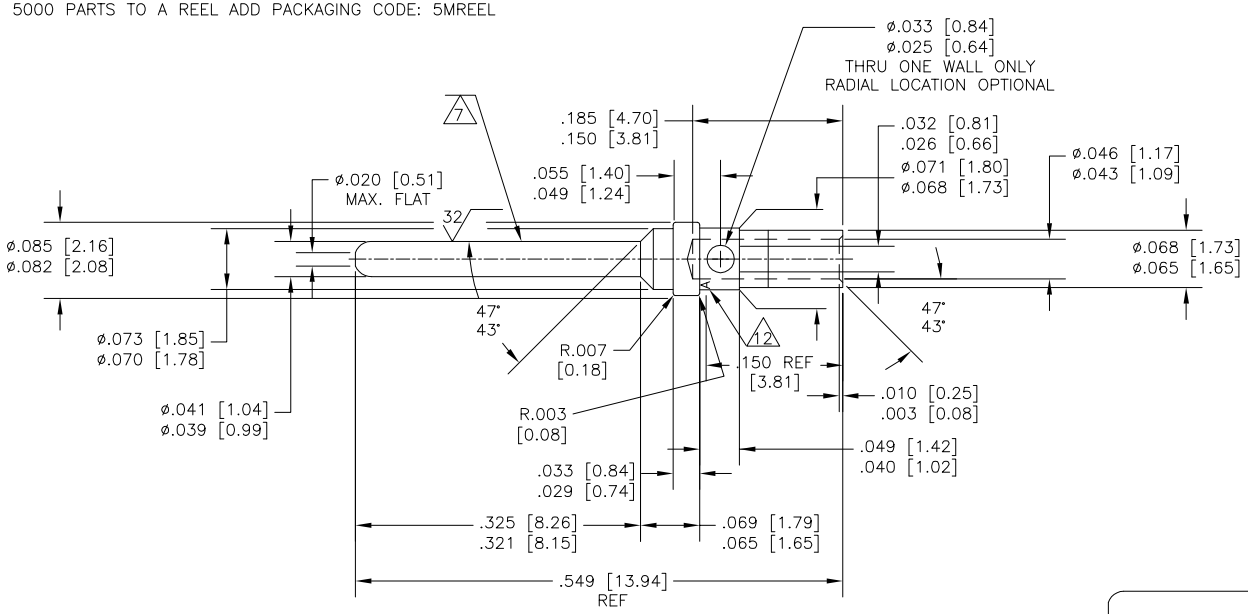

1. MATERIAL: COPPER ALLOY PER MIL–C–39029 & MIL–DTL–24308.
2. ALL DIMENSIONS APPLY AFTER PLATING.
3. ---
4. ALL DIAMETERS CONCENTIC WITH EACH OTHER WITHIN .004 T.I.R.
5. PIN MATES WITH SOCKET 205090 (AS 39029/63).
6. ALL SURFACES HAVE 63 OR BETTER FINISH, UNLESS SHOWN.
7. POINT OF PLATING MEASUREMENT .188 [4.78] FROM TIP OF PIN.
8. PLATING: GOLD PER ASTM–B–488 (TYPE II) OVER NICKEL PER AMS–QQ–N–290.
9. PLATING: GOLD PER ASTM–B–488 (TYPE II) OVER COPPER PER MIL–C–14550, CLASS 4.
10. PLATING: GOLD PER ASTM–B–488 (TYPE II, CLASS 0) OVER NICKEL PER AMS–QQ–N–290.
11. PLATING:
    MATING AREA: GOLD PER ASTM–B–488 (TYPE II) OVER NICKEL PER AMS–QQ–N–290.
    NON MATING AREA: GOLD PER ASTM–B–488 OVER NICKEL PER AMS–QQ–N–290.
12. MANUFACTURER'S LOGO ("A" OR "– . .') LOCATION OPTIONAL
13. CONTACTS QUALIFIED TO AS39029/64–369
14. CONTACTS QUALIFIED TO GSFC–S–311–P–4/10, NASA P/N G–10–P1
15. RESTRICTED PART NUMBER.
16. CONTACTS MUST MEET DIMENSIONAL & PERFORMANCE REQUIREMENTS OF GSFC–S–311–P–4/08, NASA P/N G–10–P1 & 100% RESIDUAL MAGNETISM.

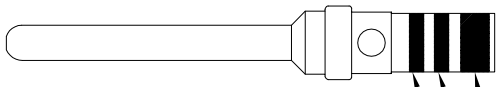

COLOR BANDS
PART NO 205089–1
AND 2–205089–1 ONLY

ORANGE COLOR CODE BAND
BLUE COLOR CODE BAND
WHITE COLOR CODE BAND

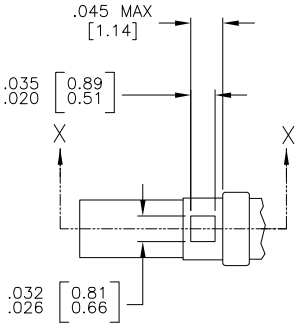

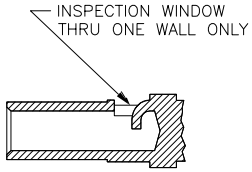

SECTION X—X

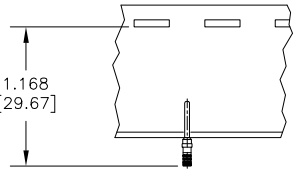

INSPECTION WINDOW OPTIONAL DESIGN 16

16	WITHOUT COLOR CODE	9	2–205089–6
15			2–205089–4
15			2–205089–2
15			2–205089–1
13	WITHOUT COLOR CODE	8	1–205089–1
	WITHOUT COLOR CODE	10	1–205089–0
14	WITHOUT COLOR CODE	9	205089–4
13	CONTACT ON TAPE	SAME AS –1	205089–2
13	AS SHOWN	11	205089–1
	DESCRIPTION	PLATING	PART NO.

THIS DRAWING IS A CONTROLLED DOCUMENT.

DIMENSIONS: INCHES[mm]

TOLERANCES UNLESS OTHERWISE SPECIFIED:
0 PLC ± –
1 PLC ± –
2 PLC ± –
3 PLC ± –
4 PLC ± –
ANGLES ± –

MATERIAL 1
FINISH –

DWN J. KAISER 25AUG2003
CHK D. MILLER 10–13–03
APVD D. MILLER 10–13–03
PRODUCT SPEC —
APPLICATION SPEC —
WEIGHT 0.000000

TE Connectivity

NAME PIN SIZE 20 CONTACT, AMPLIMITE

SIZE A2 | CAGE CODE 00779 | DRAWING NO C–205089 | RESTRICTED TO —

CUSTOMER DRAWING | SCALE 10:1 | SHEET 1 OF 1 | REV AA

205089

1471–9 (1/15)